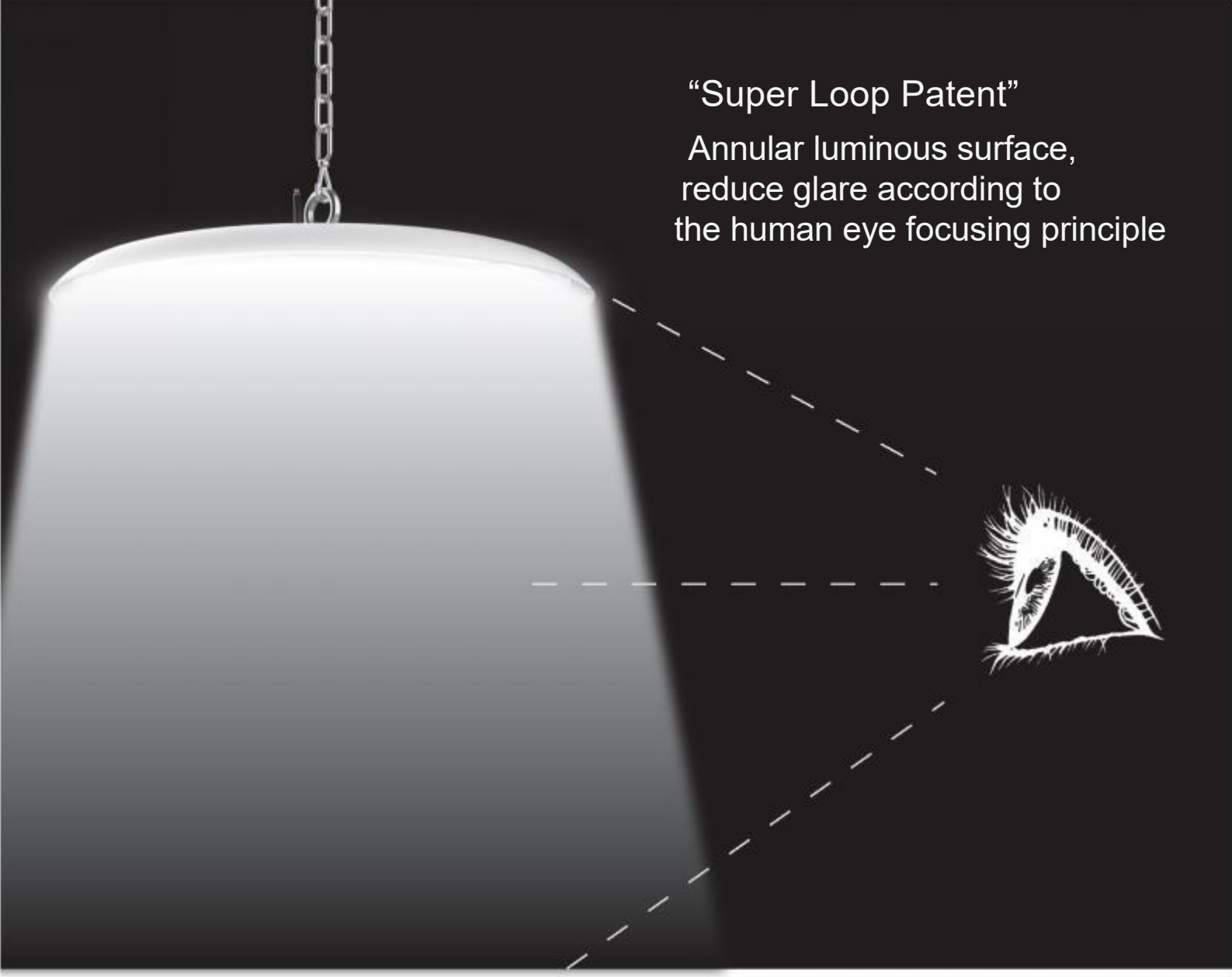

Waterproof
IP66

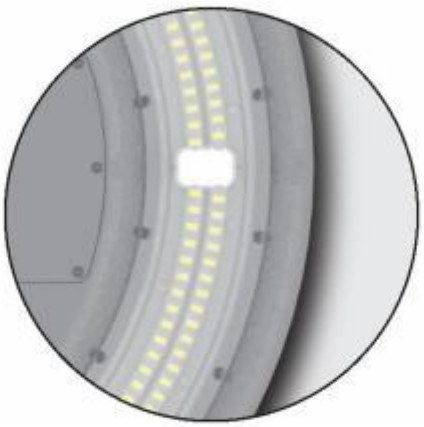

Transmittance > 94%

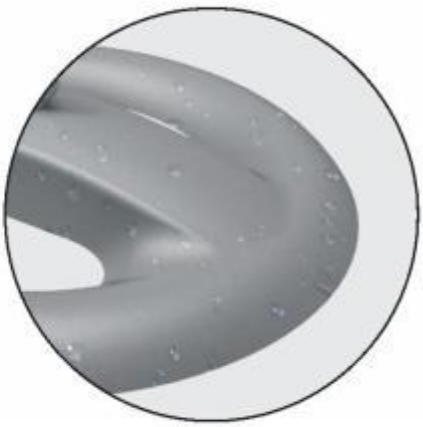

Hydrophobic
surface

Superior to traditional round high bay lights, making it your unique product

WATTAGE	80/100/150/200/240W
DRIVER	MEANWELL
LAMP LUMINOUS FLUX	160LM/W±5%
LIGHT SOURCE	LUMILEDS
CRI	Ra>70/80
CCT	2700-6500K
RATED VOLTAGE	AC 100-240V 277V~, 50/60Hz
POWER FACTOR	>0.95
BEAM ANGLE	60°/90°/120°
IP GRADE	IP66
OPERATING TEMP	-40℃~55℃

CO-HALO-80W
12,800LM±5%
3.6kg±5%
ϕ380x63mm

CO-HALO-100W
16,000LM±5%
3.8kg±5%
ϕ380x63mm

CO-HALO-150W
24,000LM±5%
3.8kg±5%
ϕ380x63mm

CO-HALO-200W
32,000LM±5%
5.6kg±5%
ϕ500x68mm

CO-HALO-240W
38,400LM±5%
5.6kg±5%
ϕ500x68mm

Installation

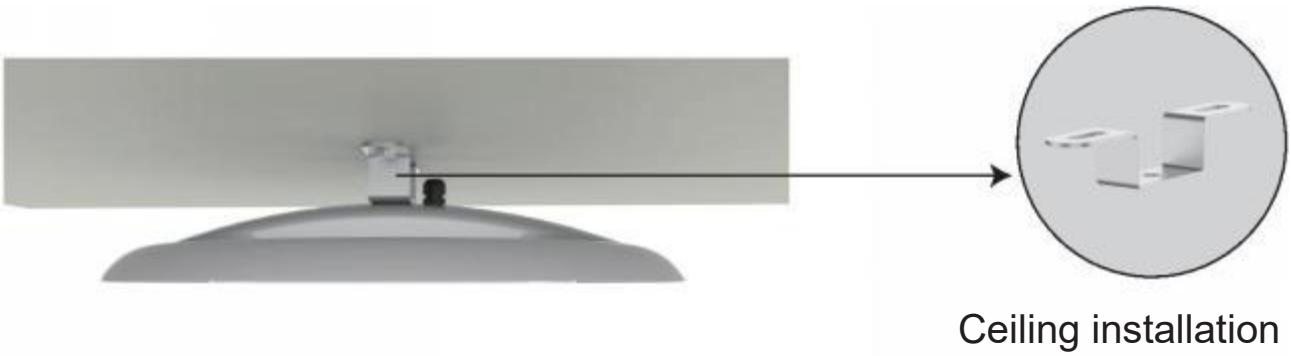

Ceiling installation

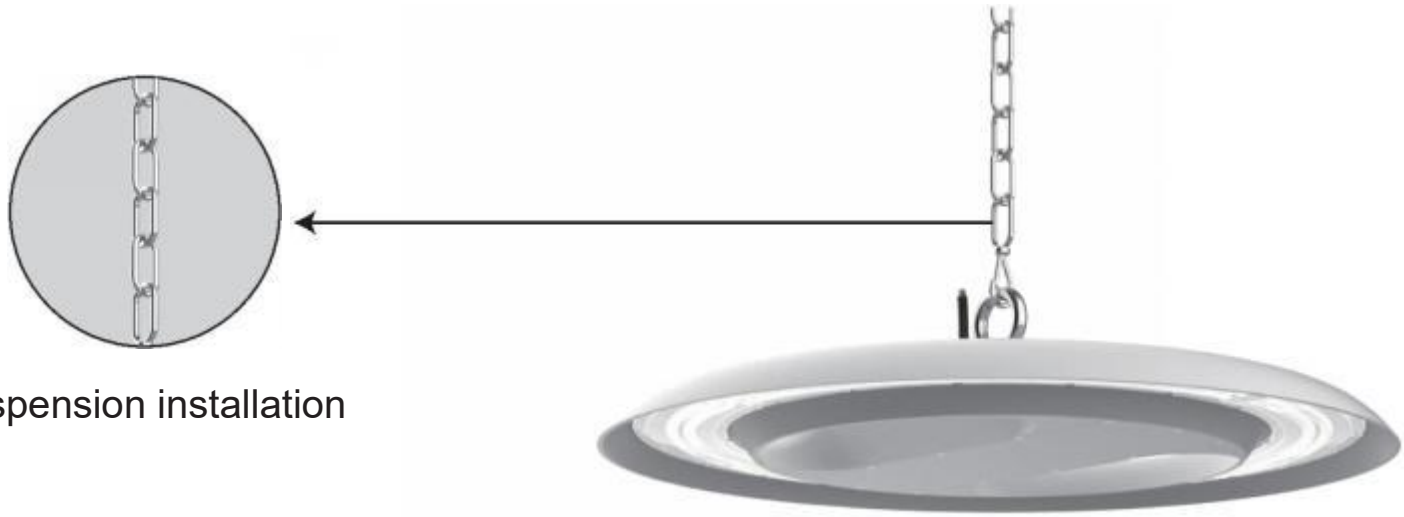

Suspension installation

Application

Curve surface design
（Suitable for dusty places）

IK10
（Suitable for indoor stadium）

160LM/W
（Suitable for high precision mill）

80/100/150/200/240W
（Suitable for any indoor places）

Test

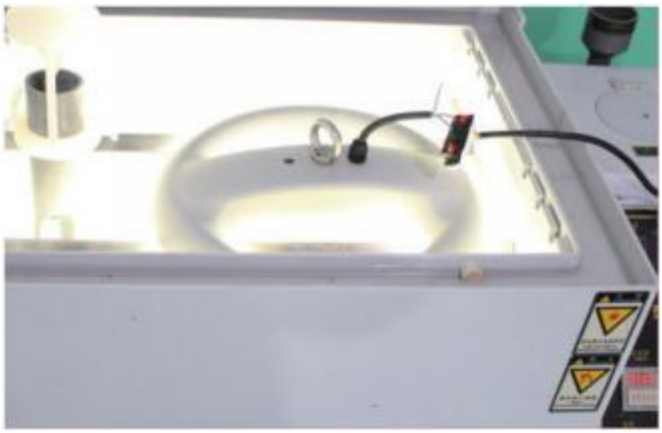

Salt SprayTest

The heat sink processed by oxidization and powder spraying so that it has good corrosion resistance

UV AgingTest

The test time is about 720 hours. After test the lamp working regularly, no discoloration appearance , no yellowing of the PC lens .

High-LowTemperatureTest

The test equipment opening 2hours, keeping temperature<-40C the lamp working fine. The test equipment opening 4hours keeping temperature>60C, the lamp keep working fine

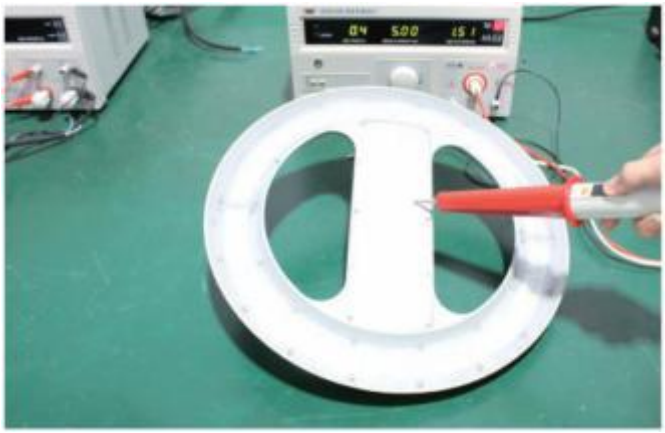

WithstandVoltageTest

Testing whether the withstand voltage is within the specified value, to avoid sudden voltage surges such as short circuit, operation error, fault, etc, causing breakdown or accidents

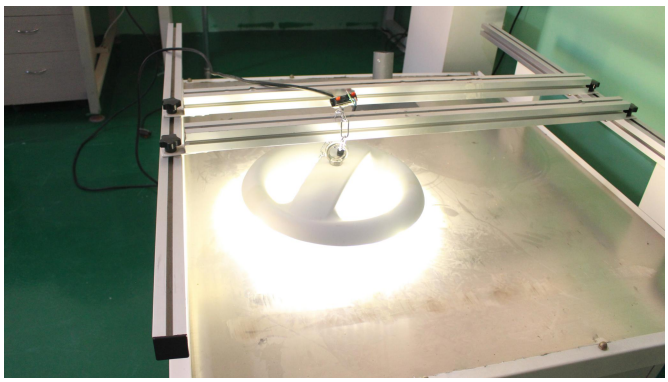

VibrationTest

Vibration test is a simulation of various vibration condition including transportation, installation and using, to ensure system robustness.

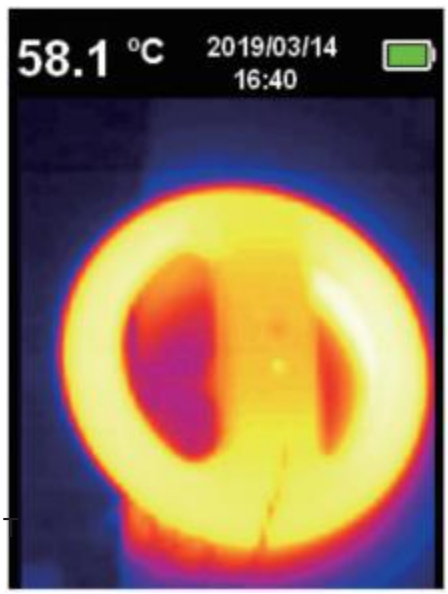

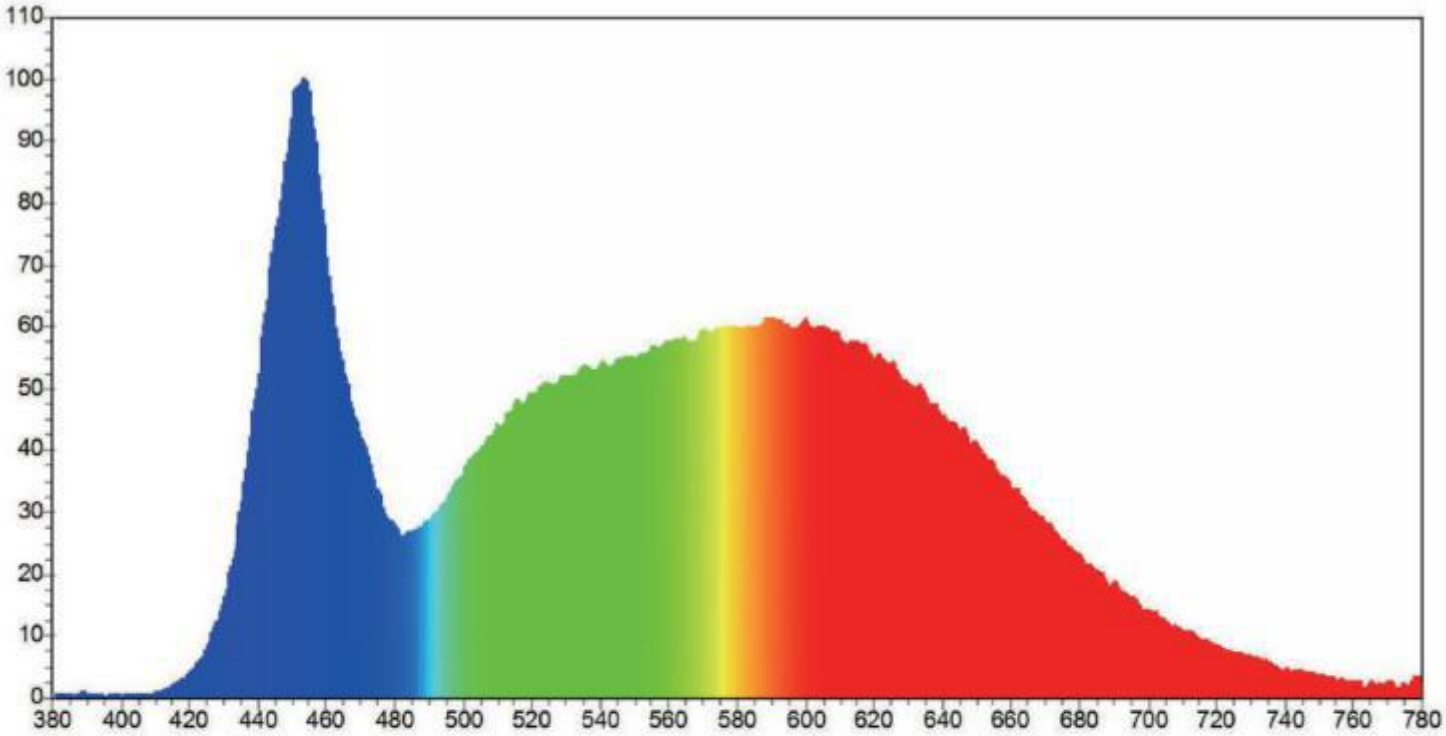

Spectrum Parameters					
x: 0.3393	y: 0.3504		R1: 80.1	R2: 84.8	R3: 85.7
u: 0.2080	v: 0.3221		R4: 80.1	R5: 80.1	R6: 76.1
WD: 566.5 nm	WP: 447.5nm		R7: 81.8	R8: 67.3	R9: 7.1
HW: 23.0 nm	Purity: 0.069		R10: 60.8	R11: 78.2	R12: 58.8
CCT: 5224 K	Ra: 79.5		R13: 80.0	R14: 91.6	R15: 77.8
DUV: 0.0018			R%: 26.9	G%: 43.1	B%: 30.0
Kred 18.71%	Kgreen 76.09%	Kblue 5.20%			

Electrical			
Flux: 31838.798 lm	P: 158.797 lm/w	P: 4247.19 mw	
I: 906.4 mA	V: 221.20 V	P: 200.5 w	PF: 0.9650

60° 90° 120°

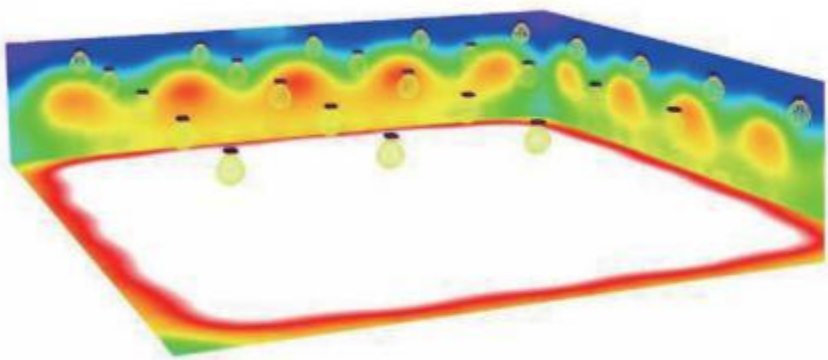

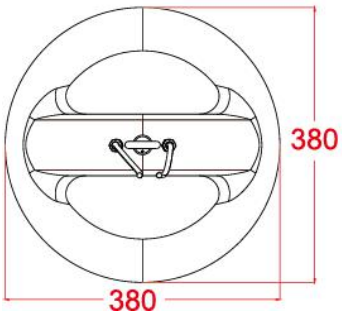

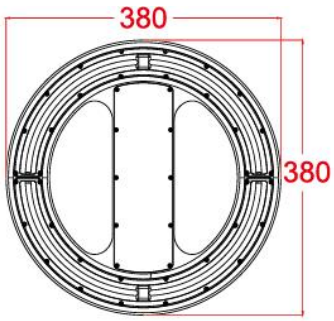

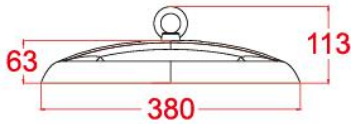

Model	Size of Box	Gross Weight	Size of Carton	Gross Weight	Box Quantity /Carton
CO-HALO-80W	42*43*15cm	4.6KG	45*45*69cm	19.2KG	4
CO-HALO-100W	42*43*15 cm	4.7KG	45*45*69cm	19.8KG	4
CO-HALO-150W	42*43*15cm	4.8KG	45*45*69cm	20.1KG	4

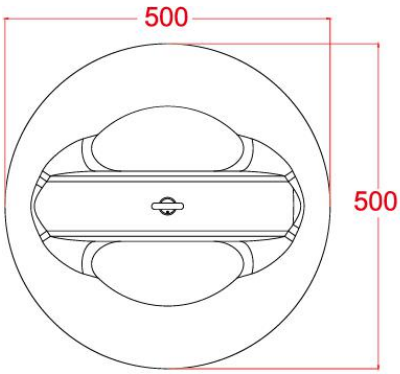

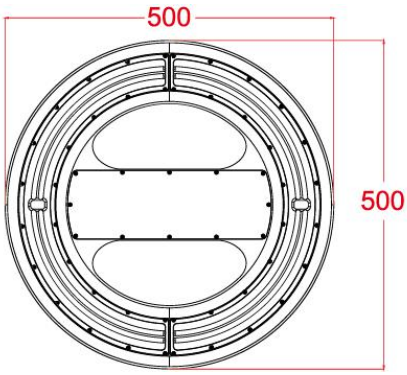

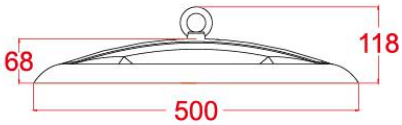
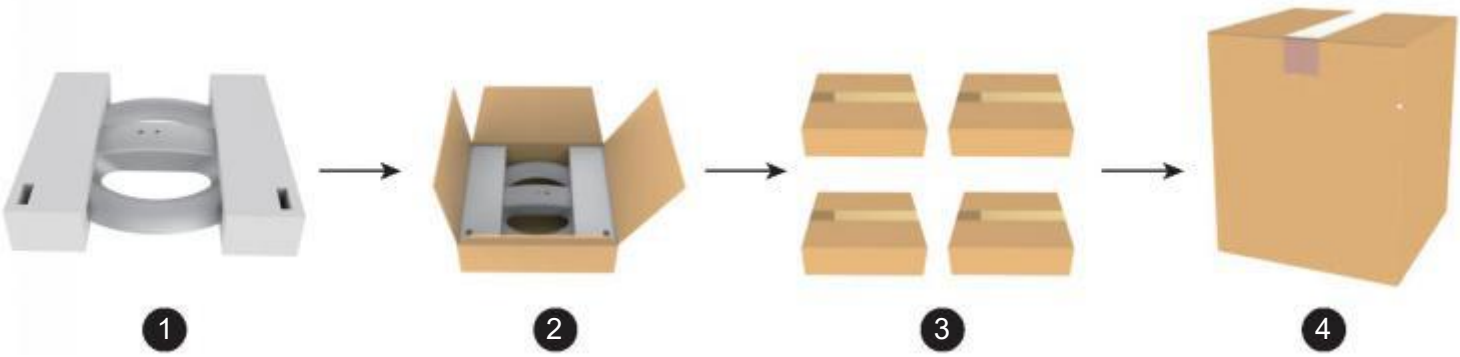
Model	Size of Box	Gross Weight	Size of Carton	Gross Weight	Box Quantity /Carton
CO-HALO-200W	55*54*16cm	6.8KG	57*57*73cm	29.6KG	4
CO-HALO-240W	55*54*16cm	6.8KG	57*57*73cm	29.6KG	4